1492-7

16

The STURTEVANT ELECTRIC MOTORS GENERATORS and GENERATING SETS

THE FRANKLIN INSTITUTE

R LPIN
Dec. 27 1912

Come
C Come Come
Come Came
Com Cam
Come
Com Ca
Come
S S S S
S S S
a B C

Brown
John Arnie
C Coleman
S Smalley

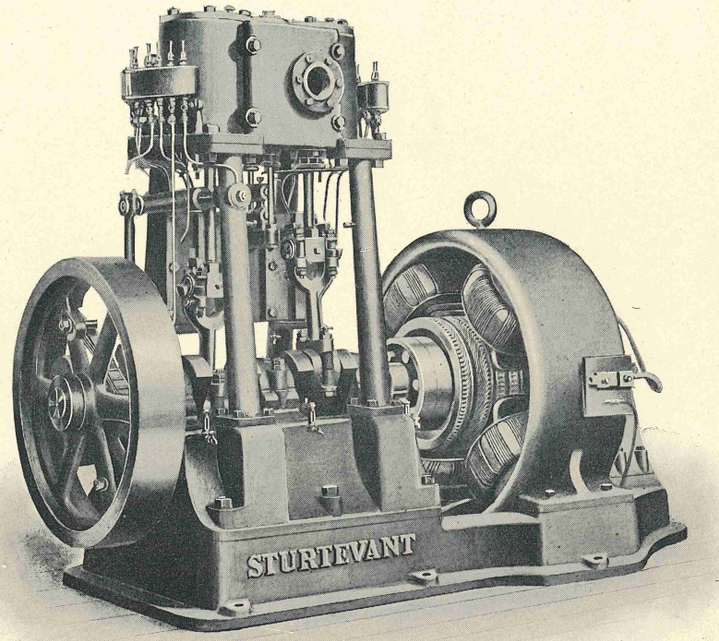

The STURTEVANT
ELECTRIC MOTORS GENERATORS *and* GENERATING SETS

B. F. STURTEVANT COMPANY
BOSTON, MASS., U. S. A.
New York Philadelphia Chicago

STURTEVANT ENGINEERING CO.,
LONDON GLASGOW
Stockholm Berlin Paris Milan Amsterdam

ADDRESS CORRESPONDENCE TO PHILADELPHIA HOUSE.

CATALOGUE No. 117.

COPYRIGHT, 1901, BY B. F. STURTEVANT CO.

SMITH & PORTER PRESS, BOSTON.

INTRODUCTORY.

OVER forty years ago we established the first blower manufactory in the United States. Within ten years thereafter the necessity of equipping large fans with the means of driving led to our designing and building a line of distinctively fan engines. For thirty years, through a most varied experience and under the most trying conditions, these engines have been developed to their present perfection. A little over ten years ago the rapid increase in the use of electricity as a motive power opened the way for the electric fan with motor and fan built the one for the other. The opportunity was recognized and we immediately established an electrical department, designed a full line of fan motors and thus gave the purchaser an opportunity to choose between an engine-driven and a motor-driven fan.

To-day we have patterns for over 100 sizes and types of engines, ranging from 2 to 250 H.P., and a record of over 8000 engines sold since we first entered this field. In our various motor designs we are likewise equipped with an equal variety. A corresponding line of generators is also built by utilizing the essential parts of these motors. Both engines and motors have been developed under the exacting conditions usually incident to fan practice, namely, high speed and constant operation with comparatively little attention.

With these elements of the ideally perfect generating set at hand it has been a relatively simple matter to combine them in a complete line of many sizes, ranging from 1½ to 100 K.W., the variety of which is not so much as approached by any other manufacturer. Only those machines and combinations which are distinctively standard are, however, listed in this catalogue. But others may be made almost without limit to meet any possible requirement within the range of capacity above specified.

B. F. STURTEVANT CO.

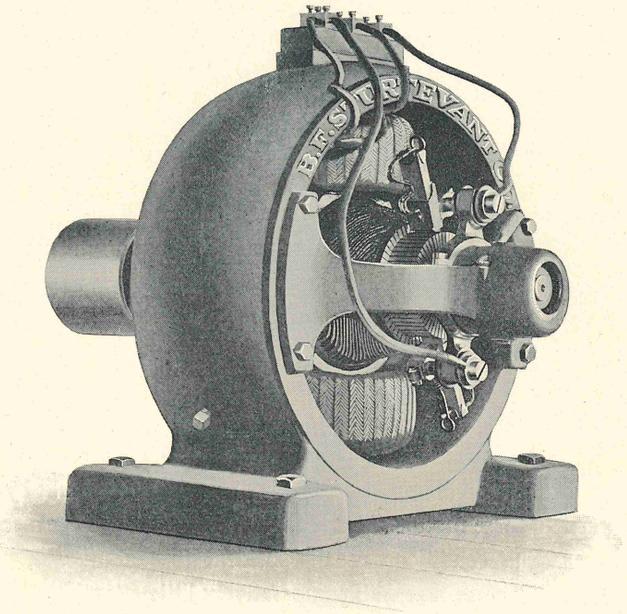

THE STURTEVANT

BI-POLAR MOTOR

OPEN TYPE.

THE STURTEVANT

BI-POLAR MOTORS

TYPE B. OPEN.

IN this type of Motor, which permits of great range of speed, the frame or magnet ring is usually of cast steel and supports the armature-bearing cradle. The cast-iron stand, within which the self-contained motor is secured by means of set screws, is entirely independent, thus allowing of its being attached to floor, wall or ceiling while the cradle is still maintained in a horizontal position. The bearings are of the ring-oiling, self-aligning type, the bearing sleeves being made of hard composition.

A crucible steel shaft supports the armature, which is of the toothed-drum type with coils wound in slots. The commutator segments, of pure lake copper drop forged, are mounted in composition shells and insulated with carefully selected pure mica. After winding, the entire armature is thoroughly saturated with insulating compound and baked at a temperature of 150° to 175° Fahr., thus rendering it oil and water-proof. The field coils are subjected to the same dipping and baking process. Carbon brushes are used exclusively, mounted in socket type holders and easily adjustable.

Size Number.	Rated Horse-Power.	Approximate Number of Revolutions per Minute.	Maximum Permissible Revolutions per Minute.	Diameter and Face of Pulley in Inches.	Weight in Pounds.
¼	.4	1,500	4,200	3 x 1¼	63
½	.75	1,400	3,800	4 x 2	160
1	1.5	1,300	2,900	4 x 3½	205
2	3.0	1,250	2,700	5 x 4	265
3	4.25	1,200	2,400	6 x 4½	460
5	6.75	1,200	2,200	7 x 5	550

MOTORS above size ½ are ordinarily furnished with V slide rails. A special form of sliding base can be furnished at extra cost, for tightening belts on motors attached to walls or ceilings. Motors of standard speeds can be wound for any voltage up to 600, and will carry their full rated loads for ten hours without sparking and with a temperature rise not exceeding 40° Cent. above that of surrounding air. Starting boxes are furnished with all machines.

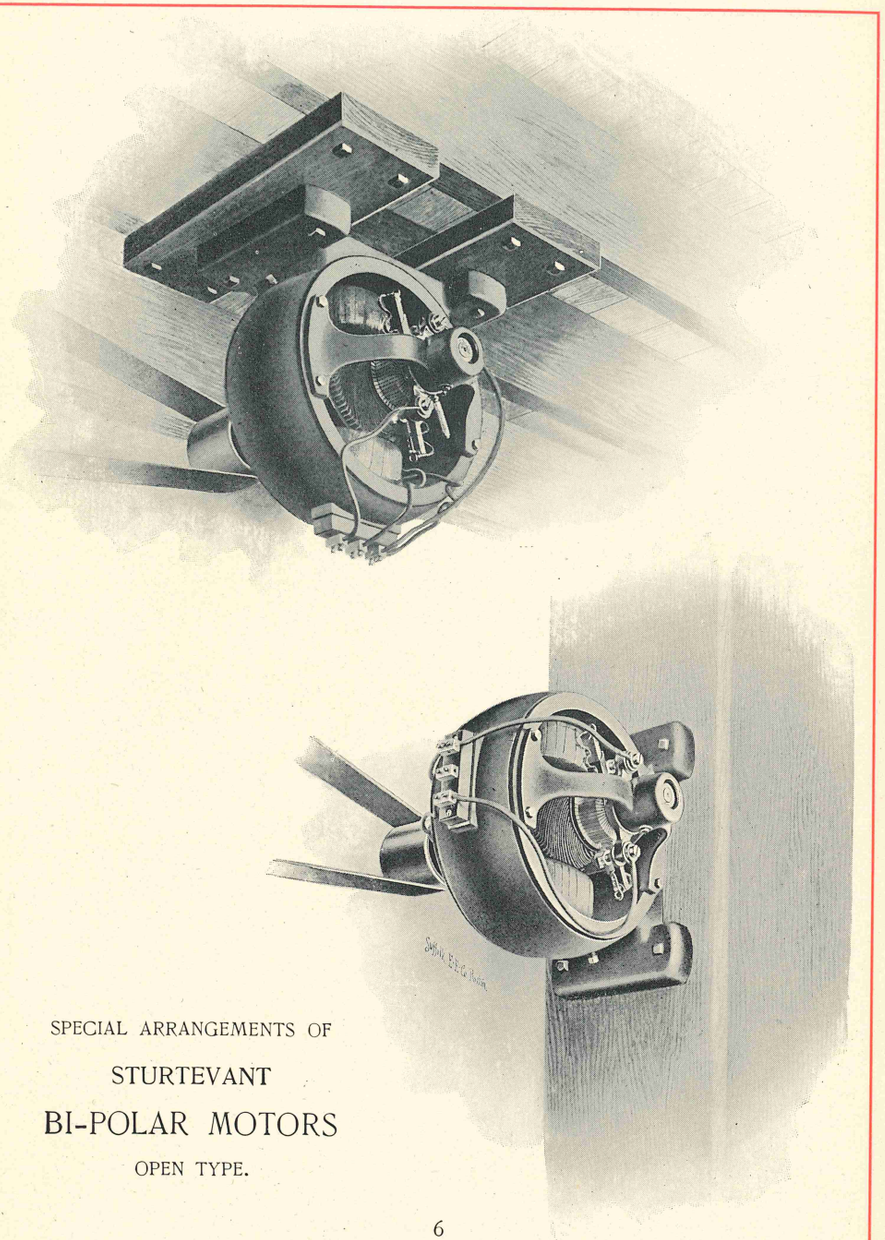

SPECIAL ARRANGEMENTS OF

STURTEVANT

BI-POLAR MOTORS

OPEN TYPE.

THE STURTEVANT

BI-POLAR MOTORS

TYPE B. OPEN.

TABLE OF PRINCIPAL DIMENSIONS.

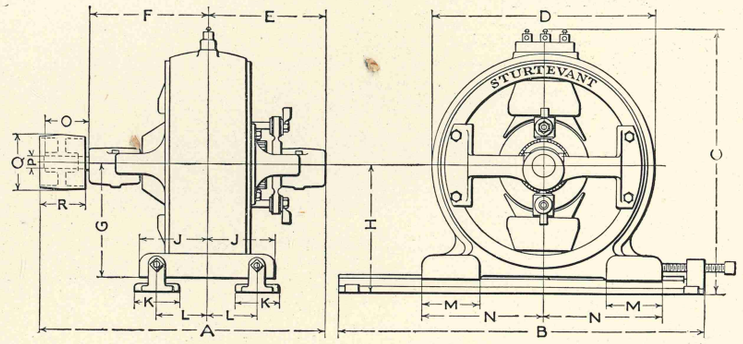

ALL DIMENSIONS ARE IN INCHES.

Size No.	A	B	C	D	E	F	G	H	J	K	L	M	N	O	P	Q	R
¼	$13\frac{15}{16}$		$12\frac{1}{4}$	$10\frac{3}{4}$	$5\frac{3}{4}$	$5\frac{15}{16}$	$5\frac{5}{8}$		$3\frac{1}{2}$			$2\frac{7}{16}$	$5\frac{3}{4}$	2	$\frac{5}{8}$	3	$1\frac{1}{4}$
½	$18\frac{1}{16}$		15	$13\frac{5}{8}$	$7\frac{7}{16}$	$7\frac{7}{8}$	7		$4\frac{1}{4}$			3	$7\frac{1}{4}$	$3\frac{1}{4}$	$\frac{3}{4}$	4	2
1	$22\frac{3}{8}$	28	$19\frac{1}{4}$	$16\frac{1}{4}$	$8\frac{11}{16}$	$8\frac{11}{16}$	$8\frac{3}{8}$	$9\frac{3}{8}$	5	$3\frac{1}{4}$	$3\frac{11}{16}$	$4\frac{1}{4}$	$8\frac{7}{8}$	$4\frac{1}{4}$	$\frac{7}{8}$	4	$3\frac{1}{2}$
2	$26\frac{3}{16}$	28	$21\frac{3}{8}$	$18\frac{1}{4}$	$10\frac{7}{16}$	$10\frac{11}{16}$	$9\frac{3}{8}$	$10\frac{3}{8}$	6	$3\frac{1}{4}$	$4\frac{1}{2}$	$4\frac{3}{4}$	10	4	$1\frac{1}{8}$	5	4
3	$29\frac{1}{2}$	31	24	$20\frac{1}{2}$	12	$12\frac{3}{8}$	$10\frac{1}{2}$	$11\frac{1}{2}$	7	$3\frac{1}{2}$	5	$5\frac{1}{2}$	$11\frac{1}{2}$	4	$1\frac{3}{8}$	6	$4\frac{1}{2}$
5	$32\frac{13}{16}$	31	$25\frac{1}{4}$	$21\frac{3}{4}$	$13\frac{7}{32}$	$13\frac{25}{32}$	$11\frac{1}{8}$	$12\frac{1}{8}$	$7\frac{1}{2}$	$3\frac{1}{2}$	$5\frac{1}{2}$	6	$12\frac{1}{2}$	5	$1\frac{1}{2}$	7	5

Explanation. — When not provided with slide rails, the locations of the bolt holes in the feet are indicated by dimensions L and (N–½ M). On the ¼ and ½ sizes, which are not regularly equipped with slide rails, the dimension L is respectively $2\frac{1}{4}$ and $3\frac{1}{4}$ inches.

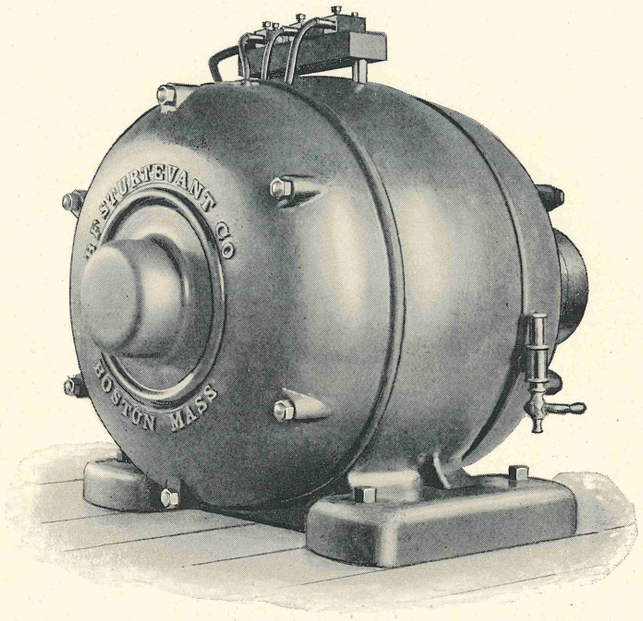

THE STURTEVANT

BI-POLAR MOTOR

ENCLOSED TYPE.

THE STURTEVANT

BI-POLAR MOTORS

TYPE E. B. ENCLOSED.

THE demand for a Motor of simple construction for use in damp and dusty locations has led to the design of Type E. B., which is entirely enclosed, thoroughly dust-proof and as nearly waterproof as this form of construction will permit. It is identical with Type B, already illustrated and described, with the additional feature of the removable casings, which serve to enclose the entire motor. These casings are each made in two parts, — the main case and the end cap. The former is machine fitted to the motor ring and secured by small bolts. Although readily removable, the joints are practically dust and water-tight. The caps, which are also machine fitted, are held in place by stout spring catches which allow of removal by giving the cap a quarter turn. Instant access to the brushes is thus provided.

The enclosed character of these motors necessarily restricts the free radiation of heat, and special care has therefore been taken to so design them as to prevent overheating. That this result is attained is evidenced by the fact that they will carry their full rated loads for ten hours without sparking, and with a temperature rise not exceeding 50° Cent. above that of the surrounding atmosphere.

Size Number.	Rated Horse-Power.	Approximate Number of Revolutions per Minute.	Diameter and Face of Pulley in Inches.	Weight in Pounds.
¼	¼	1,500	3 x 1¼	80
½	½	1,400	4 x 2	190
1	1	1,300	4 x 3½	250
2	2	1,250	5 x 4	325
3	3	1,200	6 x 4½	550
5	5	1,200	7 x 5	675

THESE motors can be wound for the same voltage and fitted with slide rails in the same manner as the Type B. motors They are particularly adapted for attachment to wall or ceiling. Starting boxes are included with all motors.

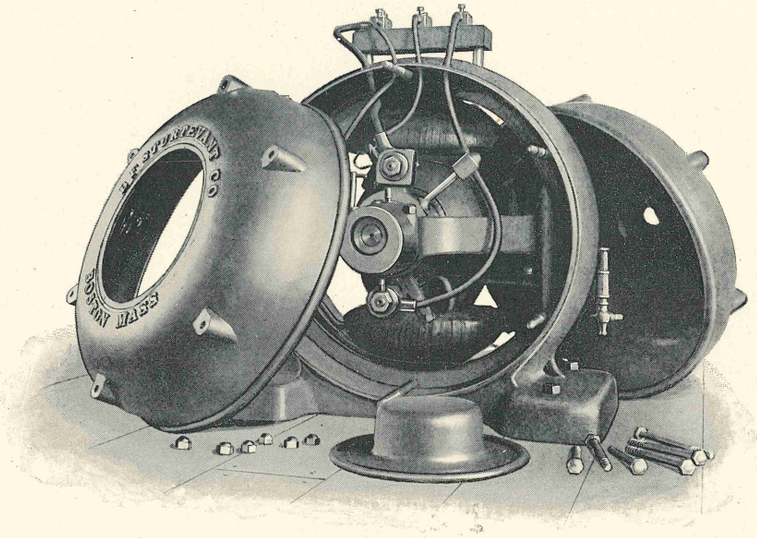

DETAILS OF

THE STURTEVANT

BI-POLAR MOTORS

ENCLOSED TYPE.

THE STURTEVANT

BI-POLAR MOTORS

TYPE E. B. ENCLOSED.

TABLE OF PRINCIPAL DIMENSIONS.

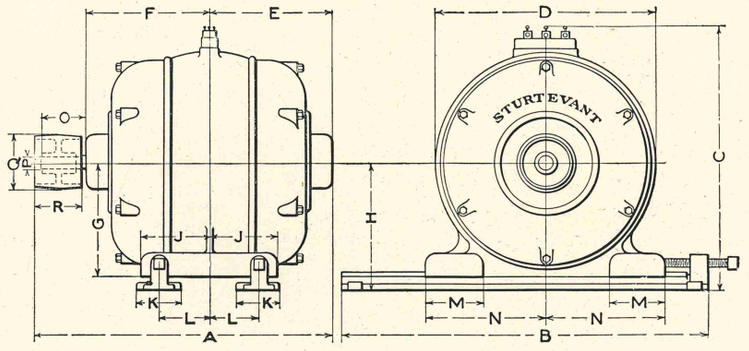

ALL DIMENSIONS ARE IN INCHES.

Size No.	A	B	C	D	E	F	G	H	J	K	L	M	N	O	P	Q	R
¼	$14\frac{3}{16}$		$12\frac{1}{4}$	$10\frac{3}{4}$	6	$6\frac{3}{16}$	$5\frac{5}{8}$		$3\frac{1}{2}$			$2\frac{7}{16}$	$5\frac{3}{4}$	2	$\frac{5}{8}$	3	$1\frac{1}{4}$
½	$18\frac{5}{16}$		15	$13\frac{5}{8}$	$7\frac{11}{16}$	$7\frac{11}{16}$	7		$4\frac{1}{4}$			3	$7\frac{1}{4}$	$3\frac{1}{4}$	$\frac{3}{4}$	4	2
1	$22\frac{3}{4}$	28	$19\frac{1}{4}$	$16\frac{1}{4}$	$9\frac{1}{16}$	$9\frac{1}{16}$	$8\frac{3}{8}$	$9\frac{3}{8}$	5	$3\frac{1}{4}$	$3\frac{11}{16}$	$4\frac{1}{4}$	$8\frac{7}{8}$	$4\frac{1}{4}$	$\frac{7}{8}$	4	$3\frac{1}{2}$
2	$26\frac{9}{16}$	28	$21\frac{3}{8}$	$18\frac{1}{4}$	$10\frac{13}{16}$	$11\frac{1}{16}$	$9\frac{3}{8}$	$10\frac{3}{8}$	6	$3\frac{1}{4}$	$4\frac{1}{2}$	$4\frac{3}{4}$	10	4	$1\frac{1}{8}$	5	4
3	$29\frac{15}{16}$	31	24	$20\frac{1}{2}$	$12\frac{7}{16}$	$12\frac{13}{16}$	$10\frac{1}{2}$	$11\frac{1}{2}$	7	$3\frac{1}{2}$	5	$5\frac{1}{2}$	$11\frac{1}{2}$	4	$1\frac{3}{8}$	6	$4\frac{1}{2}$
5	$33\frac{5}{16}$	31	$25\frac{1}{4}$	$21\frac{3}{4}$	$13\frac{23}{32}$	$14\frac{5}{32}$	$11\frac{1}{8}$	$12\frac{1}{8}$	$7\frac{1}{2}$	$3\frac{1}{2}$	$5\frac{1}{2}$	6	$12\frac{1}{2}$	5	$1\frac{1}{2}$	7	5

Explanation. — When not provided with slide rails, the locations of the bolt holes in the feet are indicated by dimensions L and (N–½ M). On the ¼ and ½ sizes, which are not regularly equipped with slide rails, the dimension L is respectively $2\frac{1}{4}$ and $3\frac{1}{4}$ inches.

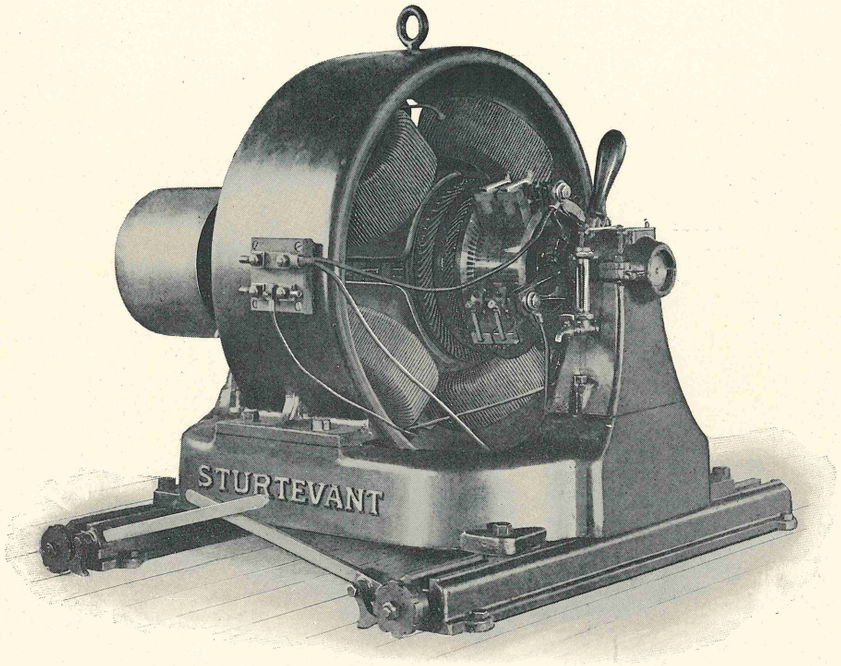

THE STURTEVANT

FOUR-POLE MOTOR

OPEN TYPE.

THE STURTEVANT

FOUR-POLE MOTORS

TYPE M. P. 4. OPEN.

THE magnet frame of the 4-Pole Machine is of special magnet steel with the field cores cast on. To these the pole shoes are secured by cap screws. Ball-and-socket bearings of ring-oiling, self-aligning construction are employed. The armature is of the barrel-wound toothed-drum type. Ventilation is effected by the use of specially constructed air ducts between the laminæ of the core. These convert the armature into a blower and create a strong draft through the windings. The winding for low voltage machines is of copper bars with easy bends. High voltage machines are wire wound with machine-formed coils. The commutator consists of drop forged segments of pure copper secured between cast-iron flanges of spider construction which allow free circulation of air.

Size Number.	Diameter and Face of Pulley in Inches.	Rated Horse-Power.	Approximate Number of Revolutions per Minute.	Maximum Permissible Revolutions per Minute.	Weight in Pounds.
2	5 x 4	2	1,400	2,200	450
3	6 x 4½	4	1,300	2,000	600
5	7 x 5	6½	1,200	1,900	700
7½	8 x 6	9	1,000	1,900	800
10	9 x 7	15	975	1,800	1,000
15	11 x 8	21	925	1,700	1,500
20	12 x 8	27	875	1,600	2,000
25	14 x 9½	33	850	1,500	2,500
30	15½ x 10	43	850	1,500	3,000
40	16 x 12½	62	775	1,250	4,000
60	18 x 20	93	675	1,100	6,000
80	22 x 23	125	500	1,000	8,000

THE above horse-power ratings are for standard armature windings. Although any slight change in voltage and speed affects the horse-power, the ampere capacity remains constant unless the change is great enough to require special winding. Starting boxes are furnished with all motors.

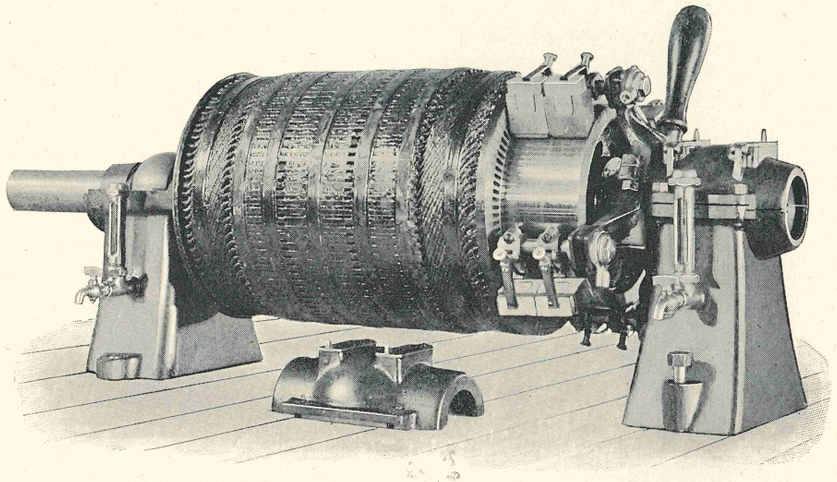

DETAILS OF

THE STURTEVANT

FOUR-POLE MOTOR

OPEN TYPE.

THE STURTEVANT

FOUR-POLE GENERATORS

TYPE M. P. 4. OPEN.

THE 4-Pole Generators are identical in general design with the 4-pole motors previously described. All machines are fitted with carbon brushes mounted in holders of the sliding socket type. The field coils of double cotton-covered wire are rendered absolutely oil and waterproof by saturation in a special compound and subsequent baking at high temperature. Armatures are subjected to similar treatment. All machines are given a full-load test for sufficient time to bring every part to maximum temperature, which never exceeds 40° Cent., and are guaranteed to carry full rated load for ten hours without sparking at brushes or overheating. Slide rails are provided with all machines.

Size Number.	Diameter and Face of Pulley in Inches.	K.W.	Approximate Number of Revolutions per Minute.	Weight in Pounds.
2	5 x 4	2	1,500	450
3	6 x 4½	3½	1,400	600
5	7 x 5	6	1,300	700
7½	8 x 6	8	1,200	800
10	9 x 7	12½	1,100	1,000
15	11 x 8	17½	1,050	1,500
20	12 x 8	22½	1,025	2,000
25	14 x 9½	27½	1,000	2,500
30	15½ x 10	35	975	3,000
40	16 x 12½	50	925	4,000
60	18 x 20	75	800	6,000
80	22 x 23	100	600	8,000

THE above K.W. capacities are for standard armature windings. Although any slight change in voltage and speed affects the K.W., the ampere capacity remains constant unless the change is great enough to require special winding. Generators can be furnished for higher or lower speeds. Field rheostats are included with all generators.

THE STURTEVANT

FOUR-POLE MOTORS

TYPE M. P. 4. OPEN.

TABLE OF PRINCIPAL DIMENSIONS.

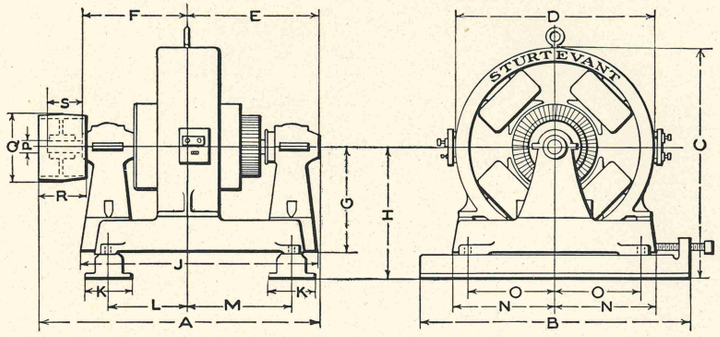

ALL DIMENSIONS ARE IN INCHES.

Size No.	A	B	C	D	E	F	G	H	J	K	L	M	N	O	P	Q	R	S
7½	34 1/16	33	27 7/8	24	16	12 3/4	13	15 7/8	28	5 7/8	9 1/2	12 3/4	12 1/2	10 1/2	1 11/16	8	6	4 5/8
10	37 1/8	33	29 5/8	25 1/2	17 1/4	13 1/2	14	16 7/8	30 1/8	5 7/8	10 1/4	14	12 7/8	10 3/4	1 15/16	9	7	5 1/8
15	41 5/8	38	32 1/2	28 1/2	19 11/16	14 15/16	15 3/8	18 1/4	33 3/4	5 7/8	10 15/16	16 7/16	14 7/16	12	2 3/16	11	8	6 1/2
20	47 1/4	38	35 3/8	31 1/2	22 5/8	16 5/8	16 3/4	19 5/8	38 1/4	5 7/8	12 5/8	18 5/8	16	13 1/8	2 1/16	12	8	6 5/8
25	51 3/8	44	38 1/8	33	25 1/4	17 3/8	18 5/8	21 5/8	41 5/8	5 7/8	12 7/8	21 1/4	17	14 1/8	2 7/16	14	9 1/2	8
30	56 1/8	44	39 7/8	35	26 5/8	20	19 3/8	22 3/8	46	5 7/8	15 1/2	22 5/8	18	15 1/8	2 7/16	15 1/2	10	9 1/2
40	60 5/8	48	43 1/2	38	28	20 1/8	20 1/2	24 1/2	47 3/8	7 3/8	15 3/8	23 1/4	19 3/8	18	2 15/16	16	12 1/2	10 7/8
60	74 7/16	56 1/2	51 7/8	44 1/2	33 3/16	21 3/8	24 1/8	29 3/8	54 5/8	8 3/4	16 1/8	27 15/16	23 1/4	21	3 1/16	18	20	19 1/16
80	90 7/8	65	59	51	40 3/4	27 1/8	27 1/2	33 1/2	67 3/4	11	20 3/8	34 7/8	26 17/32	23	3 15/16	22	23	19 3/8

THE STURTEVANT

FOUR-POLE MOTORS

TYPE M. P. 4. ENCLOSED.

TABLE OF PRINCIPAL DIMENSIONS.

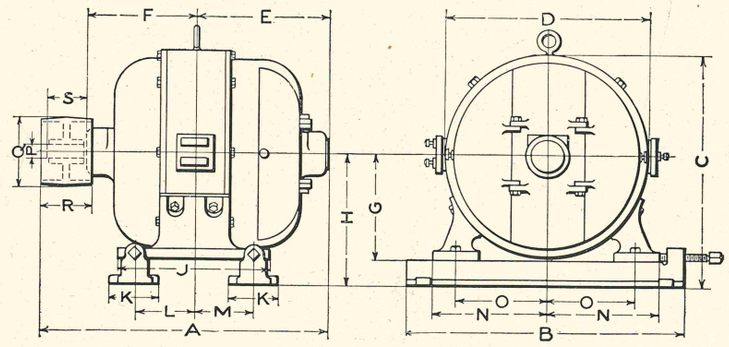

ALL DIMENSIONS ARE IN INCHES.

Size No.	A	B	C	D	E	F	G	H	J	K	L	M	N	O	P	Q	R	S
7½	33 13/16	33	27 3/8	24	15 11/16	12 5/8	12 1/2	15 3/8	18	5 7/8	7	7	13 1/2	10 3/4	1 11/16	8	6	4 3/4
10	35 5/16	33	28 1/2	25 1/2	16 5/8	12 3/4	12 7/8	15 3/4	20	5 7/8	8 1/16	8 1/16	14	11	1 15/16	9	7	4 7/8
15	42 1/16	38	31 5/8	28 1/2	19 11/16	15 3/16	14 1/2	17 3/8	25	5 7/8	10	10	16 1/4	13 1/4	2 3/16	11	8	6 1/4
20	46 13/16	44	34 5/8	31 1/2	22 5/8	16 5/8	16	18 7/8	30	5 7/8	12	12	18 1/8	14 7/8	2 3/16	12	8	6 9/16

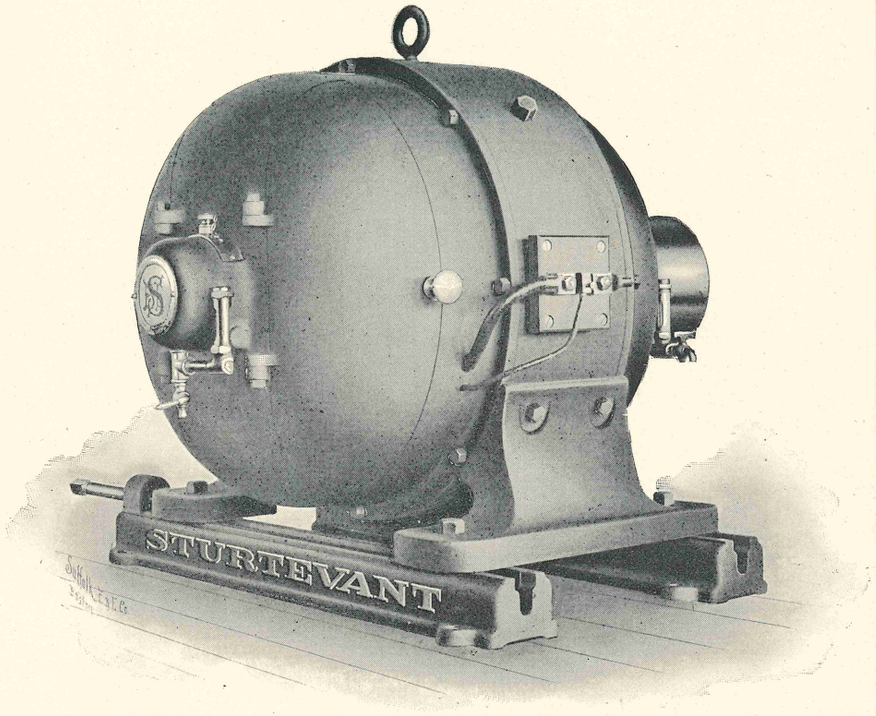

THE STURTEVANT

FOUR-POLE MOTOR

ENCLOSED TYPE.

THE STURTEVANT

FOUR-POLE MOTORS

TYPE M. P. 4. ENCLOSED.

THE 4-Pole Enclosed Motors, ranging from 7½ to 20 horse-power, complete the series of which the small sizes are built in the bi-polar type. In the 4-pole machine, the magnet frame is of magnet steel, and the field cores are cast on. To this frame the feet are rigidly attached, as clearly shown by the illustration upon the opposite page.

Hemispherical cover casings, also attached to the magnet ring, one upon either side, contain the armature shaft bearings which are of the continuous ring-oiling variety. The front casing is provided with closely-fitting doors which afford ready access to the brushes and other portions of the motor. The entire machine is thus rendered absolutely dust-proof and practically water-proof. A removable cap is attached to the centre of the casing at the end of the shaft.

In the design of this machine, special care has been taken to provide for the most perfect circulation of air through the commutator and armature, and for ample radiating surface in the casings so as to avoid all possibility of overheating. As a result, machines of this type can be operated continuously for ten hours at full rated load without sparking, and with a temperature rise not exceeding 50° above that of the surrounding atmosphere.

Size Number.	Diameter and Face of Pulley in Inches.	Rated Horse-Power.	Approximate Number of Revolutions per Minute.	Weight in Pounds.
7½	8 x 6	7½	1,000	750
10	9 x 7	10	975	900
15	11 x 8	15	925	1,350
20	12 x 8	20	875	1,800

ENCLOSED 4-pole motors in the above sizes are provided with slide rails and equipped with starting boxes. The horse-power ratings are given for standard armature windings. Although this power is affected by even a slight change in voltage or speed, the ampere capacity remains constant unless the change is great enough to require special winding.

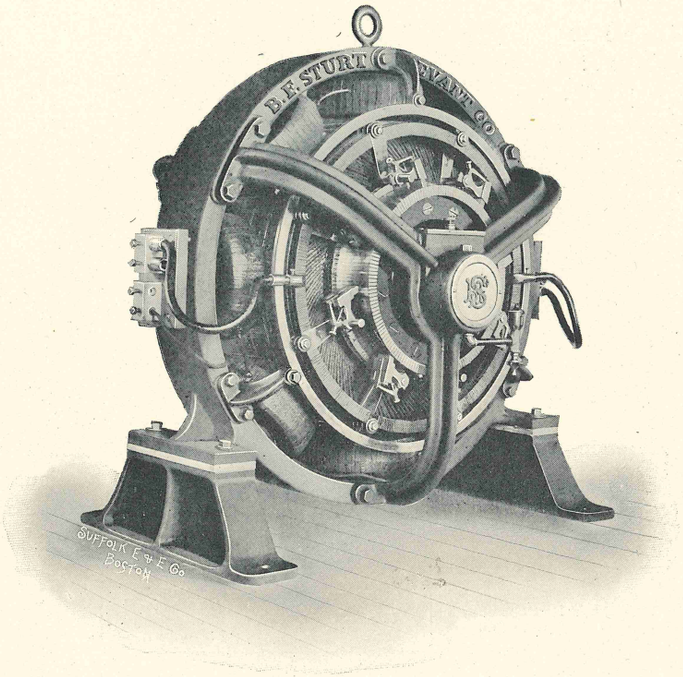

THE STURTEVANT

EIGHT-POLE MOTOR

TRIPOD TYPE.

THE STURTEVANT

EIGHT-POLE MOTORS

TYPE M. P. 8.

THESE Motors were primarily designed for the direct-connected driving of large fans at low rotative speeds. They are therefore capable of great range of speed, are exceptionally compact and of high efficiency. These qualities especially fit them for direct connection to machine tools and the like.

The magnet frames are of cast steel, cast iron or wrought iron, according to the size or requirements. In sizes 1–100 and 1½–100, the field cores are cast with the frame, and the pole shoes only are removable, but, in the larger sizes, readily detachable cores of wrought iron are bolted to the frame.

Size Number.	Type of Machine.	Horse-Power per 100 Revolutions.	Maximum Permissible Revolutions per Minute.	Weight in Pounds.
1 -100	Tripod Type.	1	900	425
1½-100		1½	900	550
2 -100		2	750	800
4 -100		4	650	1,200
6 -100		6	575	1,550
10 -100		10	475	2,200
15 -100	Pedestal Type.	15	450	4,000
24 -100		24	400	6,000
34 -100		34	350	9,000
50 -100		50	325	13,000

BARREL-WOUND armatures of the toothed-hollow-drum type are usually employed. The laminations are of special steel plate mounted in each case upon a cast-iron spider, the hub of which is extended to support the commutator. All machines, except those for very low speed and high voltage, are bar wound, the two-circuit type usually being adopted. This makes possible the use of a single pair of brushes where only small brush capacity is required. Motor ratings for the 8-pole machines are based on the horse-power delivered per 100 revolutions. Starting boxes are furnished with all motors.

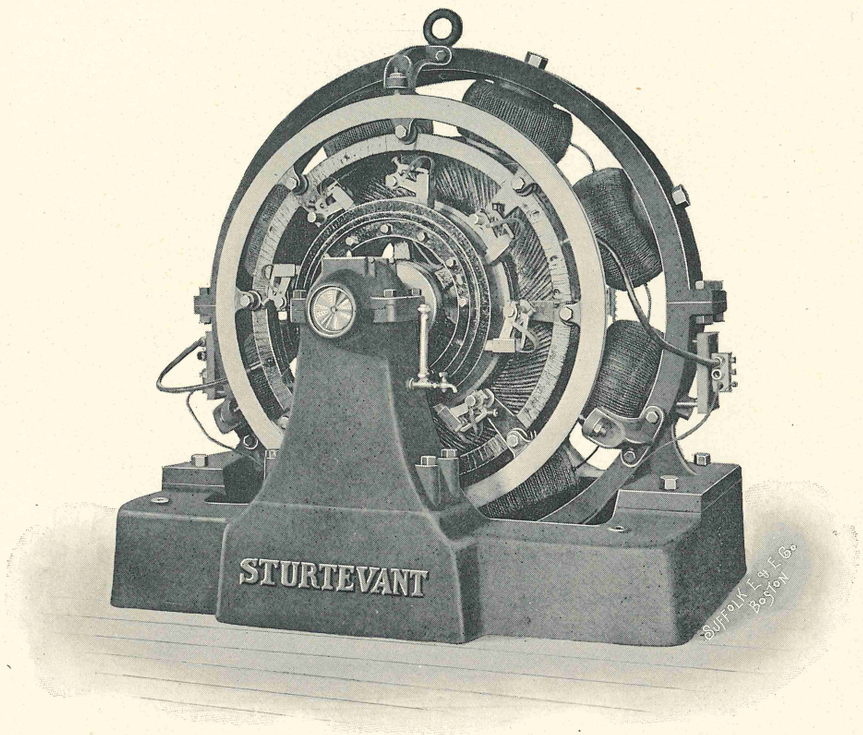

THE STURTEVANT

EIGHT-POLE MOTOR

PEDESTAL TYPE.

THE STURTEVANT

EIGHT-POLE GENERATORS

TYPE M. P. 8.

THE 8-Pole Generators are the same in design as the motors of the same type described upon a preceding page. In the larger sizes of generators, the shunt and series coils of the field windings are wound and insulated entirely separate. The brush holders are of the same pattern as used on the 4-pole machines, but the rigging for supporting the holders is radically different; brushes of opposite polarity are carried on independent rings which are attached to but insulated from a common ring which is readily adjustable. On small machines, adjustment is by hand; on large machines, by means of a hand wheel and screw. The self-contained character of the armature and commutator especially fits these machines for direct connection to any piece of apparatus.

Size Number.	Type of Machine.	K.W. at stated Revolutions per Minute.	Revolutions per Minute.	Weight in Pounds.
1 -100	Tripod Type.	3	500	425
1½-100		5	450	550
2 -100		7	400	800
4 -100		12	325	1,200
6 -100		20	375	1,550
10 -100		30	350	2,200
15 -100	Pedestal Type.	40	325	4,000
24 -100		60	275	6,000
34 -100		75	275	9,000
50 -100		100	250	13,000

THE armature and field coils are thoroughly protected against oil and water. The large radiating surface and thorough ventilation make it possible to run these machines at full load with a maximum temperature rise not exceeding 30° Cent. on the hottest part. All sizes are provided with self-aligning, ring-oiling bearings; those for sizes below the 15-100 being supported in tripod hangers while the larger sizes are equipped with pedestals and complete bases.

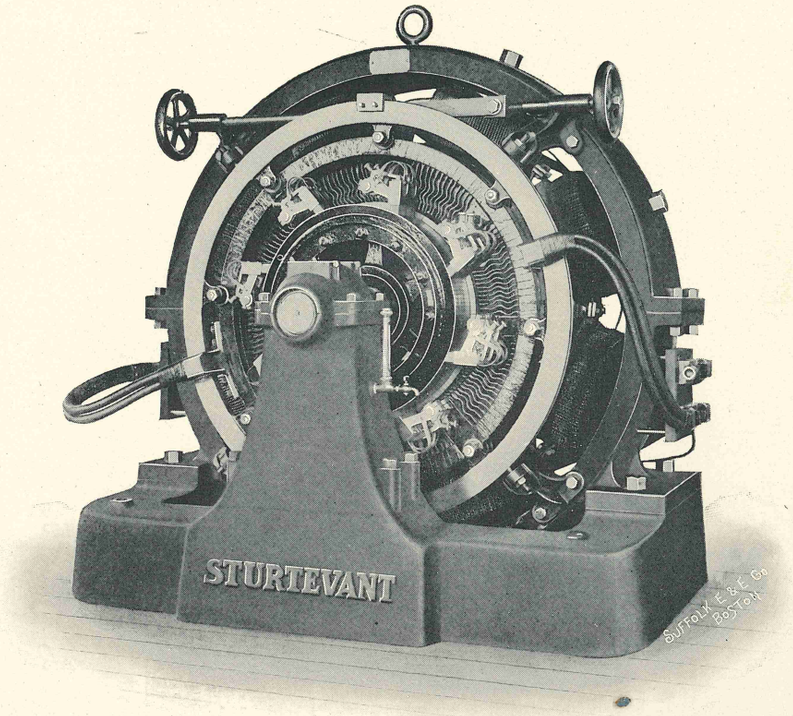

THE STURTEVANT

EIGHT-POLE GENERATOR

PEDESTAL TYPE.

THE STURTEVANT

EIGHT-POLE MOTORS AND GENERATORS

TYPE M. P. 8. TRIPOD.

TABLE OF PRINCIPAL DIMENSIONS.

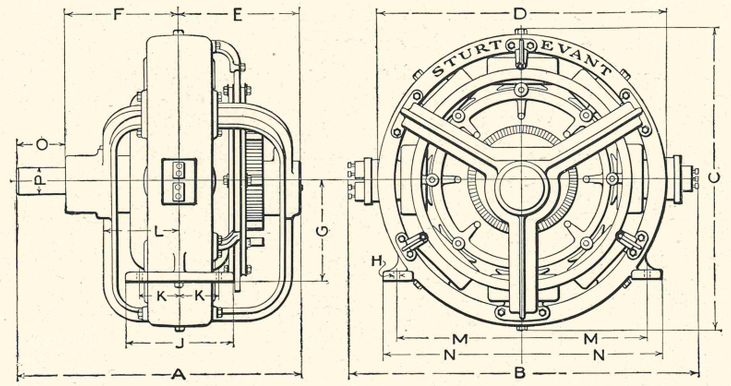

ALL DIMENSIONS ARE IN INCHES.

Size No.	A	B	C	D	E	F	G	H	J	K	L	M	N	O	P
1-100	21½	31⅜	26½	25½	10	8	9	½	6	2¼	6¾	11½	12¾	3½	1 7/16
1½-100	22	31⅜	26½	25½	10¼	8¼	9	½	6	2¼	7	11½	12¾	3½	1 7/16
2-100	28 21/32	36⅝	31¾	30¾	12⅜	10 1/16	10½	⅝	7	2⅝	8 5/16	13½	15	6 1/32	1 1/16
4-100	30 1/16	40⅝	35¾	34½	12¾	11⅛	11¾	⅝	9½	4	8¼	15¼	16¾	7 1/16	2 3/16
6-100	36¼	43⅝	39	37½	14⅛	14⅛	12¾	¾	12	5	10 11/16	16¼	18	8	3 1/16
10-100	44 1/16	51¾	45½	43½	19⅛	17	15	⅞	16	6	11¼	19	21	7 15/16	3 15/16

THE STURTEVANT

EIGHT-POLE MOTORS AND GENERATORS

TYPE M. P. 8. PEDESTAL.

TABLE OF PRINCIPAL DIMENSIONS.

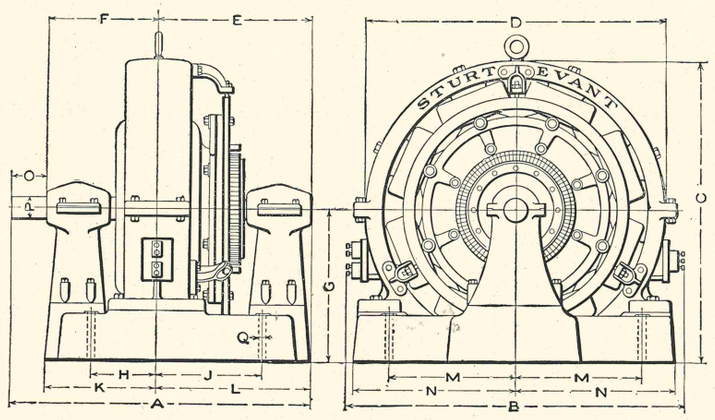

ALL DIMENSIONS ARE IN INCHES.

Size No.	A	B	C	D	E	F	G	H	J	K	L	M	N	O	P	Q
15-100	53	56¼	50⅞	49¾	25½	19 7/16	25¼	11	17⅞	19¾	25 9/16	21⅛	26 11/16	8	3 15/16	1⅛
24-100	64 1/16	62	56½	56	31⅛	23¾	28½	13¾	22½	23¾	31¼	24	31	9 1/16	4½	1¼
34-100	75	68	62¼	61½	35½	27¼	31½	12⅝	24½	26 5/16	35¾	26⅞	34 13/16	12	5	1½
50-100	82	76¼	70	68	40¼	27¾	36	14	28	27	41	24¾	38⅜	14	5½	1¾

THE STURTEVANT

GENERATING SETS

WITH SINGLE UPRIGHT ENGINES AND FOUR-POLE GENERATORS.

TABLE OF PRINCIPAL DIMENSIONS.

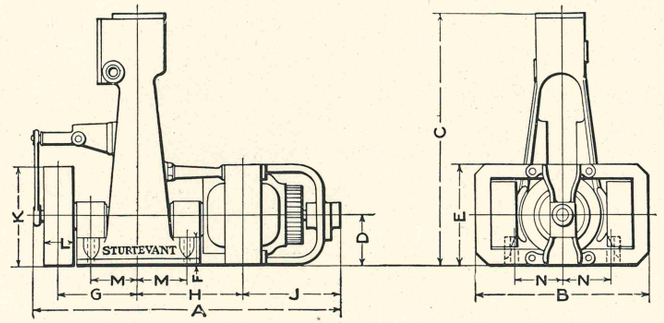

ALL DIMENSIONS ARE IN INCHES.

Size of Engine.	Size No. of Generator.	A	B	C	D	E	F	G	H	J	K	L	M	N
2½ x 2	1	28½	19	21⅛	5⅜	10¾	4¼	6½	9 1/16	9⅞	10	3	3⅞	3 13/16
3 x 2½	2	36⅝	21	30 1/16	6	12	3½	9 5/32	12⅝	11 11/16	12	3½	5⅜	6 3/16
3½ x 3	3	44⅛	23	34 5/16	6½	13	3¾	11 5/16	15 1/16	13 7/16	16	4½	6½	7⅛

Explanation. — Dimensions M and N give the locations of anchor bolt holes in both directions from centre lines of engine base. These holes are designed for the use of ¾ inch bolts in all sizes.

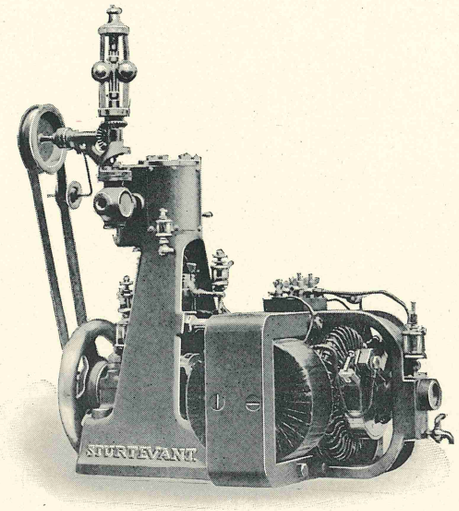

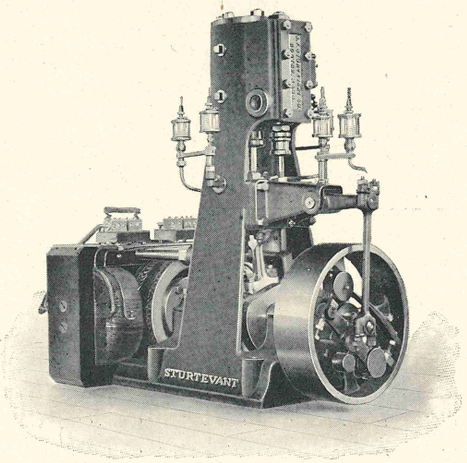

THE STURTEVANT GENERATING SETS

WITH THROTTLING AND AUTOMATIC SINGLE UPRIGHT ENGINES AND FOUR-POLE GENERATORS.

THE STURTEVANT

GENERATING SETS

WITH SINGLE UPRIGHT ENGINES AND FOUR-POLE GENERATORS.

THESE diminutive sets, familiarly known as the "Midget" type, were originally designed for torpedo-boat service. Therefore, weight, space and stability required most careful consideration. The compactness of design and the high engine speed reduce both weight and space to the minimum while the low centre of gravity insures absolute stability.

The cylinder and frame in this type of engine are cast in one piece, the frame spreading well at the base. The valve is of the balanced-piston variety and together with the operating mechanism is of the same design as is provided for the larger single valve engines shown on succeeding pages. In fact in every detail these are perfect miniature engines. All parts subject to wear are adjustable, complete continuous sight-feed oiling devices are provided for all bearings, and the reciprocating parts are carefully counter-balanced. Every essential to continuous operation at very high speed has been carefully considered and introduced. These engines are usually equipped with shaft governors, but can be fitted with the throttling type to meet special requirements.

Size of Engine.	Steam Pressure Required in Pounds.	Revolutions per Minute.	Pipes.		Size Number of Generator.	K.W.	Number of 16 c. p. 55 watt Lamps.	Weight of Engine and Generator complete in Pounds.
			Steam.	Exhaust.				
2½ x 2	120	1,000	½	¾	1 M.P. 4	1.5	27	400
3 x 2½	120	800	¾	1	2 M.P. 4	2.25	40	650
3½ x 3	120	650	1	1¼	3 M.P. 4	3	55	950

THE generator is of the consequent pole type of frame having four poles, but only two exciting coils which are placed on the horizontal pole pieces. The centre is lower and the weight is considerably less than that of circular-frame four-pole machine, while a sub-base is not required. The armature is of the usual barrel-wound, toothed-core type with air ducts for perfect ventilation. Only two brushes are required and these are so placed on top of the commutator as to be readily accessible. In general features, these machines are otherwise practically the same as those of larger size. Their extremely low weight per unit output especially adapts them to yacht and similar service.

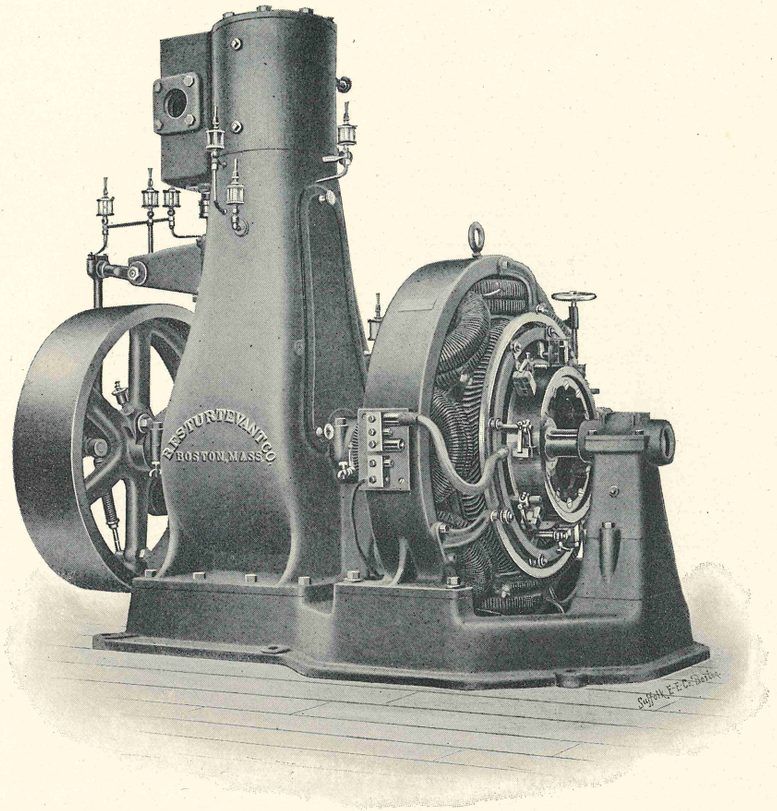

THE STURTEVANT GENERATING SET

WITH AUTOMATIC SINGLE UPRIGHT ENGINE AND EIGHT-POLE GENERATOR.

THE STURTEVANT

GENERATING SETS

WITH SINGLE UPRIGHT ENGINES AND EIGHT-POLE GENERATORS.

THE larger sizes of Upright Engines are built in the type illustrated on the opposite page. Frame and cylinder are cast and bored in one piece. The design is such as to combine the maximum of rigidity and accessibility. The valve is of the balanced-piston type and receives its motion through a rocker, from a pin on the governor weight, which is so pivoted to the wheel that a change in the position of the weight causes the pin to swing across the shaft. This movement changes the travel of the valve and regulates the points of cut-off and compression, the former between zero and seven-eighths of the stroke. The perfect balance of the valve renders such action both rapid and effective.

	Size of Engine.	Steam Pressure Required in Pounds.	Revolutions per Minute.	Pipes.		Size Number of Generator, Type M.P.S.	K.W.	Number of 16 c. p. 55 watt Lamps.	Weight of Engine and Generator complete in Pounds.
				Steam.	Exhaust.				
High Pressure.	4 x 4	90	500	1	1¼	1 -100	3	55	1,150
	5 x 5	90	450	1½	1½	1½-100	5	90	1,525
	6 x 6	90	400	2	2	2 -100	7	125	2,425
	7 x 7	90	325	2½	2½	4 -100	12	220	3,325
	8 x 6	90	350	2½	3	6 -100	15	275	3,800
	9 x 6	90	350	3	3½	6 -100	18	330	3,900
	10 x 6	90	375	3	3½	6 -100	22	400	4,000
Low Pressure.	6 x 4	40	400	1½	2	1 -100	2.5	45	1,325
	8 x 5	40	300	2	2½	1½-100	3.25	60	1,725
	10 x 6	40	250	2½	3	2 -100	4.5	80	2,325
	13 x 7	40	200	3	3½	4 -100	7	125	3,475

BOTH high and low-pressure engines are practically identical except as regards size of cylinder and design of frame. In the latter the frame is in two pieces. The cylinders are thoroughly lagged, the cranks accurately counterbalanced, and all moving parts provided with efficient oiling devices. The generator is of the 8-pole variety previously described. Its short length of armature shaft makes it particularly desirable for direct connection.

THE STURTEVANT

GENERATING SETS

WITH SINGLE UPRIGHT ENGINES AND EIGHT-POLE GENERATORS.

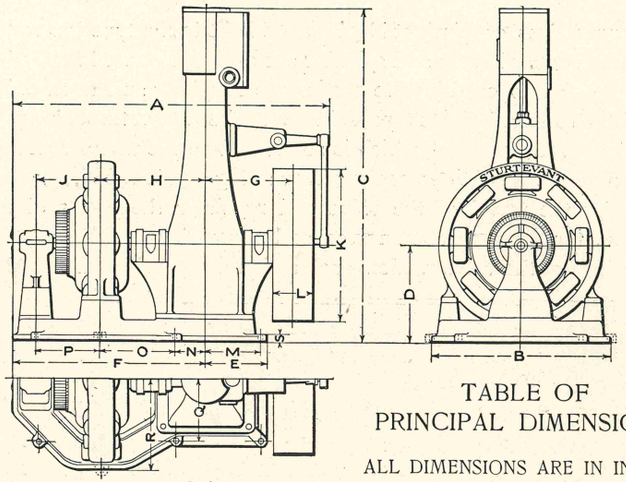

TABLE OF PRINCIPAL DIMENSIONS.

ALL DIMENSIONS ARE IN INCHES.

	Size of Engine.	Size of Generator.	A	B	C	D	E	F	G	H	J	K	L	M	N	O	P	Q	R	S
High Pressure.	4 x 4	1 -100	46	28¾	45 13/16	14	8⅜	29	11⅞	14⅝	10½	20	5½	7¼	14⅝			7¼	14⅜	1¼
	5 x 5	1½-100	51¾	28¾	53 1/16	16	9⅜	31¾	14½	16⅝	10⅞	24	6½	8¼	16⅝			8¼	14⅜	1
	6 x 6	2 -100	58¾	33½	62	18	11½	36	16½	19½	12⅛	28	7½	10⅜	19½			11⅜	16¾	1¼
	7 x 7	4 -100	66 1/16	37⅝	70 13/16	21	13 5/16	39 15/16	19	22 3/16	13	32	8½	12 1/16	22 3/16			13 19/32	18 13/16	1¼
	8 x 6	6 -100	69 9/16	40	63 1/16	19⅞	13 7/16	43 7/16	19	23 11/16	14⅝	32	8½	12 3/16	8¼	15 7/16	14⅜	13⅝	20	1¼
	9 x 6	6 -100	69 9/16	40	64 1/16	19⅞	13 7/16	43 7/16	19	23 11/16	14⅝	32	8½	12 3/16	8¼	15 7/16	14⅜	13⅝	20	1¼
	10 x 6	6 -100	69 9/16	40	64 1/16	19⅞	13 7/16	43 7/16	19	23 11/16	14⅝	32	8½	12 1/16	8¼	15 7/16	14⅜	13⅝	20	1¼
Low Pressure.	6 x 4	1 -100	46	28¾	46 3/16	14	8⅜	29	14¼	14⅝	10½	24	6½	7¼	14⅝			7¼	14⅜	1¼
	8 x 5	1½-100	52 3/16	28¾	53 1/16	16	9⅜	31¾	16 11/16	16⅝	10⅞	28	7½	8¼	16⅝			8¼	14⅜	1
	10 x 6	2 -100	59	33½	62 5/16	18	11½	36	18 21/32	19½	12⅛	32	8½	10⅜	19½			11⅜	16¾	1¼
	13 x 7	4 -100	66¼	37⅝	70 13/16	21	13 5/16	39 15/16	21¼	22 5/16	13	36	8½	12 1/16	22 3/16			13 19/32	18 13/16	1¼

Explanation. — Sizes 8 x 6 to 10 x 6 high pressure engines have six anchor bolts each, as shown in full lines. Other sizes have four bolts, the single bolts represented as dotted on centre line of magnet frame being substituted for those located by dimensions P and O. All bolts are ¾ inch.

THE STURTEVANT

GENERATING SETS

WITH ENCLOSED DOUBLE AND COMPOUND UPRIGHT ENGINES AND FOUR AND EIGHT-POLE GENERATORS.

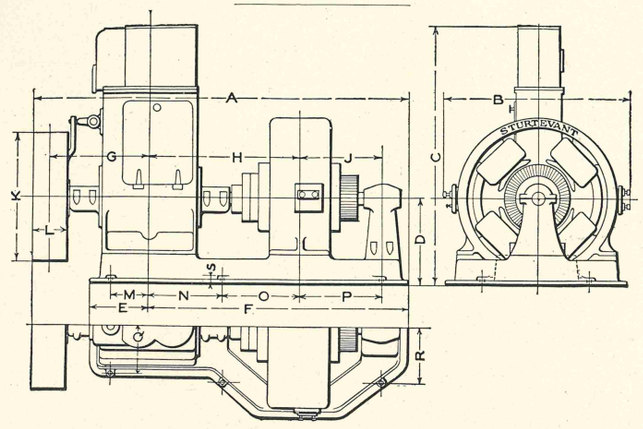

TABLE OF PRINCIPAL DIMENSIONS. ALL DIMENSIONS ARE IN INCHES.

	Size of Engine.	Size of Generator.	A	B	C	D	E	F	G	H	J	K	L	M	N	O	P	Q	R	S
Double.	3½ x 2½	7½ M.P. 4	56 3/16	26⅝	37¼	12¾	8¼	38 5/16	15⅛	21¾	12¾	20	5½	4½	11¾	10	10	8 7/16	10	1
	4 x 3	10 M.P. 4	67 3/16	27½	42 1/16	13½	10	43 3/16	20⅛	25 1/16	14	24	6½	5	14 3/16	11½	11½	9	10⅝	1½
	5 x 4	20 M.P. 4	77 3/16	34¾	45¼	16½	10¾	51½	22 5/16	28⅜	18⅝	28	7½	6	14⅛	14¼	15¼	9¾	12¾	1¾
	6 x 5	30 M.P. 4	86⅜	38	64	20	13	57 1/16	24 3/16	34 3/16	18⅝	32	8½	8	20 3/16	14	14	10¾	15⅜	1¾
	7 x 5	40 M.P. 4	87¾	41	64½	20½	13⅞	61 1/16	26 1/16	35 7/16	20¾	32	8½	8	20 7/16	15	15	10¾	16	1¾
	8 x 5½	60 M.P. 4	89 9/16	50⅞	72¼	24	16 9/16	73	28⅛	42¼	22 5/16	36	9½	10¾	20⅞	21⅜	22 5/16	13 1/16	15¼	2
Compound. For 175 lbs. pres.	4 - 7 x 4	20 M.P. 4	76 1/16	36¾	58⅞	16½	10½	51½	21 9/16	28 3/16	18⅝	28	7½	6	14⅛	14¼	15¼	9¾	12¾	1¾
	5 - 8½ x 5	40 M.P. 4	91 1/16	43¾	69 1/16	21	13¾	61 1/16	25¾	35 7/16	20¾	32	8½	10	20 7/16	15	15	12¼	16	1¾
	7½-13 x 6½	15-100 M.P.8	98 1/16	58½	68⅞	18	21 1/16	65 5/16	28	38 9/16	20¼	36	9½	18	20¾	17 13/16	20¼	16 15/16	18¼	2
	8½-15 x 7	24-100 M.P.8	109 9/16	64¼	74⅞	19	23¾	74 7/16	30	39 7/16	25¼	36	9½	10¾	21 5/16	18⅛	25¼	18½	21	2¼
For 125 lbs. pres.	4 - 7 x 4	10 M.P. 4	70 9/16	29½	58⅞	16½	10½	45	21 9/16	27⅛	14	28	7½	6	15⅝	11½	11½	9¾	10⅛	1½
	5 - 8½ x 5	20 M.P. 4	84 1/16	36¾	69 1/16	21	13¼	54 1/16	25¾	31 9/16	18⅝	32	8½	10	17 5/16	14¼	15¼	12¼	12¾	1¾
	7½-13 x 6½	6-100 M.P.8	83½	43⅝	68⅞	18	21 1/16	50¾	28	29½	14⅝	36	9½	18	14 5/16	15 3/16	14⅝	16 15/16	13⅝	1½
	8½-15 x 7	10-100 M.P.8	92 1/16	51¾	74⅞	19	23¾	57 5/16	30	32 9/16	18	36	9½	19¾	14 7/16	18⅛	18	18½	17	2

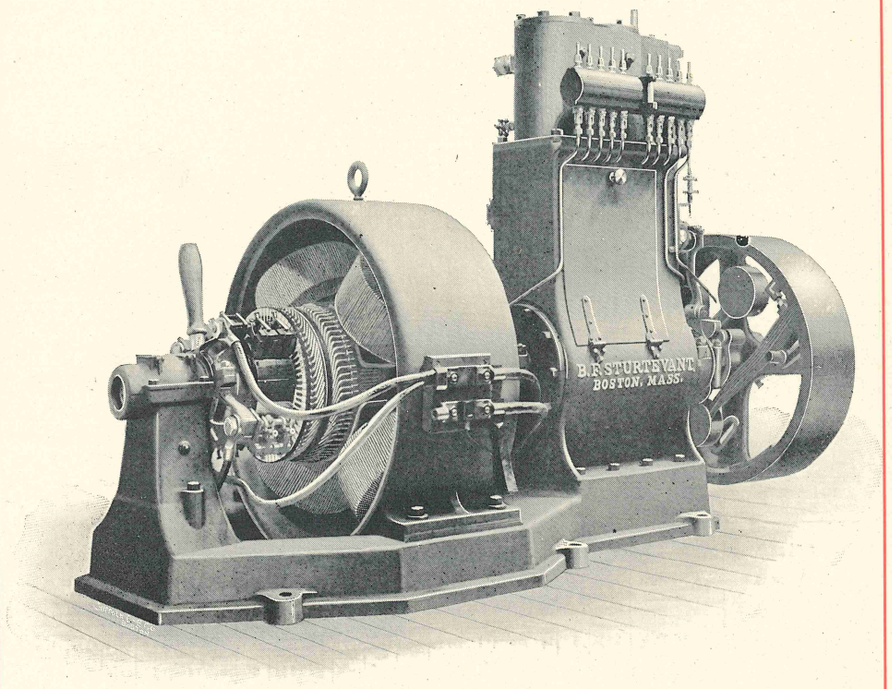

THE STURTEVANT GENERATING SET

WITH AUTOMATIC ENCLOSED DOUBLE UPRIGHT ENGINE AND FOUR-POLE GENERATOR.

THE STURTEVANT

GENERATING SETS

WITH ENCLOSED DOUBLE UPRIGHT ENGINES AND FOUR-POLE GENERATORS.

IN the Single Valve Automatic Double Enclosed Upright Engine, the cylinders are placed side by side in the same casting; the cranks are set opposite, *i.e.*, at an angle of 180°. Steam being admitted simultaneously to the top of one cylinder and the bottom of the other, the reciprocating parts are balanced in their movements and high speed is made possible. The cylinders are of large diameter as compared with the stroke, so that great power may be developed at high rotative but moderate piston speed, making the engine particularly suitable for direct-connected dynamo driving.

The steam admission to both cylinders is regulated by a single piston valve, under the control of the shaft governor, which is capable of the closest regulation. All moving parts subject to friction are of steel and the bearings of ample size. Automatic relief valves are provided to prevent any danger of damage by water in the cylinder.

Complete sight-feed oiling arrangements from a single oil tank connect with all of the bearings, and the frame is so constructed as to readily and entirely enclose all running parts, while still leaving them perfectly accessible by the mere opening of the door.

Size of Engine.	Steam Pressure Required in Pounds.	Revolutions per Minute.	Pipes.		Size Number of Generator, Type M.P.4.	K.W.	Number of 16 c. p. 55 watt Lamps.	Weight of Engine and Generator complete in Pounds.
			Steam.	Exhaust.				
3½ x 2½	90	750	1½	1½	7½	4.5	80	1,650
4 x 3	90	650	2	2	10	7	125	2,500
5 x 4	90	575	2	2½	20	12	220	4,000
6 x 5	90	500	2½	3	30	17.5	320	5 800
7 x 5	90	450	3	3½	40	24	440	6,850
8 x 5½	90	425	3½	4	60	32	580	9,000

THE 4-Pole Generators employed with this type of engine are of the same construction as the independent machines already described. The single cast-iron bed plate to which both engine and generator are bolted renders the set perfectly self-contained.

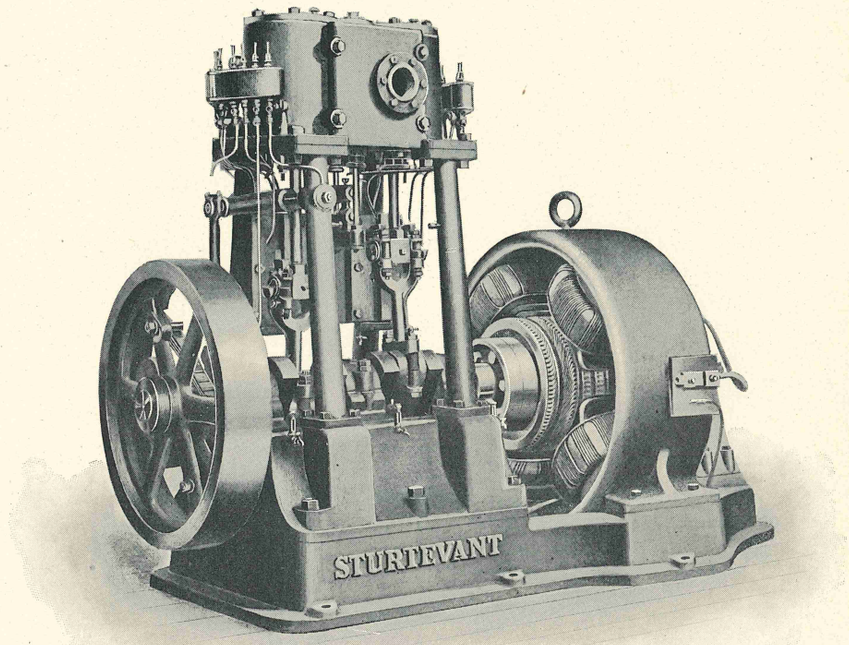

THE STURTEVANT GENERATING SET

WITH AUTOMATIC DOUBLE OPEN-TYPE UPRIGHT ENGINE AND FOUR-POLE GENERATOR.

THE STURTEVANT

GENERATING SETS

WITH OPEN-TYPE DOUBLE UPRIGHT ENGINES AND FOUR-POLE GENERATORS.

IN this design of Sturtevant Engine, the bed carries three main journal bearings, brass bushed in their lower halves and provided with continuous oiling devices in connection with oil reservoirs beneath; its interior is formed into a basin which collects all drip from water or oil. The four heavy upright columns are securely fastened to this bed, and to their upper ends is bolted the single cylinder casting, comprising the two cylinders, which are of proportionally large diameter and short stroke.

Two piston valves are operated in unison, by a single rocker and yoke, each regulating the admission of steam to one cylinder. They are fitted with snap rings, which serve to maintain tight joints and travel in removable bushings, thus simplifying the matter of repairs in the event of excessive wear. The regulator is of the same general form as that used upon the other types of upright engines.

Size of Engine.	Steam Pressure Required in Pounds.	Revolutions per Minute.	Pipes.		Size Number of Generator, Type M.P.4	K.W.	Number of 16 c. p. 55 watt Lamps.	Weight ot Engine and Generator complete in Pounds.
			Steam.	Exhaust.				
8 x 5½	90	425	3½	4	60	32	580	9,600
9 x 5½	90	425	3½	4	60	40	730	10,000

THE cross heads are of the slipper type, with projecting cross-head pins; the connecting rods have yoked cross-head pin ends and are of large size. Both connecting rods and cross heads are of forged steel, and all parts of the engine are of the highest grade as regards material and workmanship. The cylinders are thoroughly lagged. Complete sight-feed oiling arrangements from a common tank are provided for all bearings.

The open-type compound engines illustrated upon a succeeding page are of identically the same design and construction, except as regards the size of the cylinders.

The 4-pole type of generator is employed for direct connection and is of the same construction as the independent machines previously described. The armature end of the flanged coupling is forged to the shaft, and connection made by through bolts.

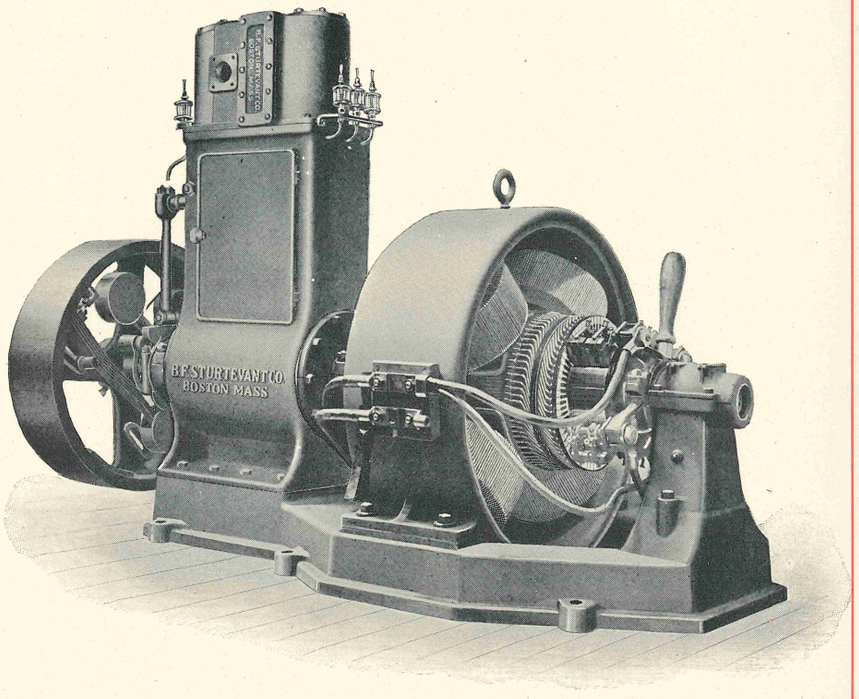

THE STURTEVANT GENERATING SET

WITH AUTOMATIC COMPOUND ENCLOSED UPRIGHT ENGINE AND FOUR-POLE GENERATOR.

THE STURTEVANT GENERATING SETS

WITH OPEN AND ENCLOSED COMPOUND UPRIGHT ENGINES AND FOUR AND EIGHT-POLE GENERATORS.

THE Open-Type Compound Upright Engine is built only in sizes 6½ & 11 x 5½ and 7 & 13 x 5½. In general appearance and construction — except as regards the cylinders — it is identical with the open-type double engine described on a preceding page. All other engines listed below are substantially of the type of the compound enclosed upright engine illustrated upon the opposite page and are similar to the double enclosed upright engines. They all possess the same features of ready enclosure from dust, of ample continuous oiling devices, and of general construction for long-continued operation at high speed.

Size of Engine.	Steam Pressure Required in Pounds.	Revs. per Minute.	Pipes.		Size Number of Generator.	K.W.	No. of 16 c.p. 55 watt Lamps.	Weight of Engine and Gen. complete in Pounds.
			Steam.	Exhaust.				
4 & 7 x 4	175	575	1½	2	20 M.P. 4	12	220	4,000
5 & 8½ x 5	"	500	2	2½	40 M.P. 4	20	365	6,000
6½ & 11 x 5½	"	425	2½	3	60 M.P. 4	32	580	9,000
7 & 13 x 5½	"	425	3	3½	60 M.P. 4	40	730	10,000
7½ & 13 x 6½	"	425	3	3½	15-100 M.P. 8	50	910	12,500
8½ & 15 x 7	"	400	3½	4	24-100 M.P. 8	75	1,365	15,000
4 & 7 x 4	125	575	1½	2	10 M.P. 4	6	110	3,000
5 & 8½ x 5	"	500	2	2½	20 M.P. 4	10	180	4,000
6½ & 11 x 5½	"	425	2½	3	30 M.P. 4	15	275	6,000
7 & 13 x 5½	"	425	3	3½	40 M.P. 4	22	400	8,000
7½ & 13 x 6½	"	425	3	3½	6-100 M.P. 8	27.5	500	10,000
8½ & 15 x 7	"	425	3½	4	10-100 M.P. 8	40	730	12,500

The K.W. capacities are those developed at given steam pressure non-condensing.

THE cylinders are thoroughly lagged to prevent condensation and provided with special automatic relief valves. All oilers are of the sight-feed pattern, with tubes leading to all interior moving parts.

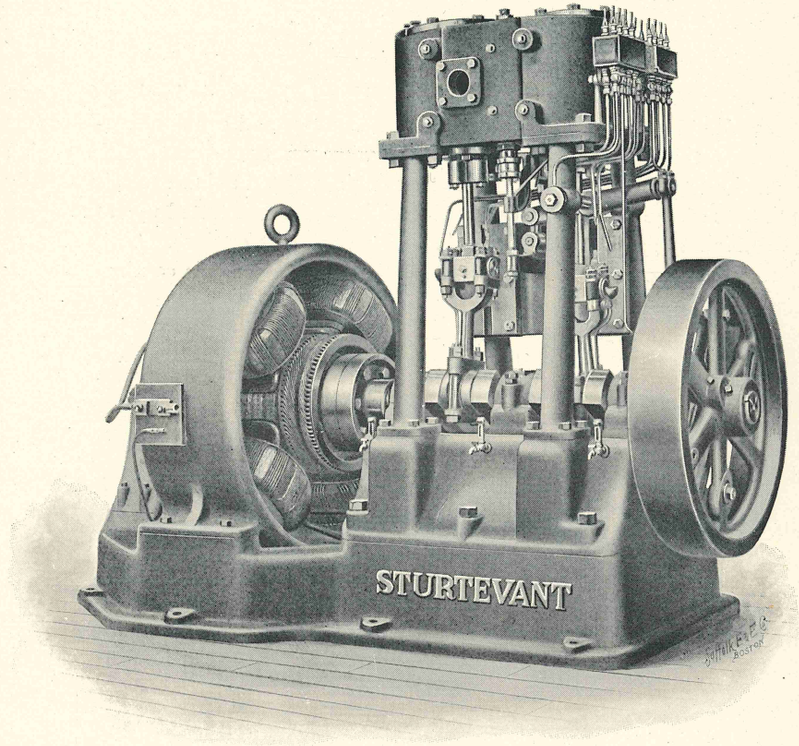

THE STURTEVANT GENERATING SET

WITH AUTOMATIC COMPOUND OPEN-TYPE UPRIGHT ENGINE AND FOUR-POLE GENERATOR.

THE STURTEVANT

GENERATING SETS

WITH OPEN-TYPE DOUBLE AND COMPOUND UPRIGHT ENGINES AND FOUR-POLE GENERATORS.

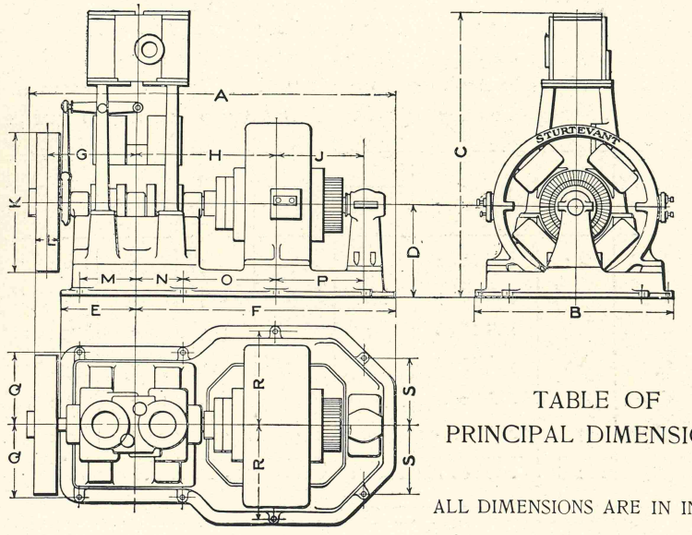

TABLE OF PRINCIPAL DIMENSIONS.

ALL DIMENSIONS ARE IN INCHES

	Size of Engine.	Size of Generator.	A	B	C	D	E	F	G	H	J	K	L	M	N	O	P	Q	R	S
Double.	8 x 5½	60	95 13/16	51½	74	24	17⅛	69 11/16	23	36¾	22 15/16	36	6	14	14	22¾	22 15/16	18 1/16	24½	15⅝
	9 x 5½	60	100	51½	77 3/16	28	21 15/16	69 13/16	25⅛	38⅞	22 15/16	36	6	15⅝	11⅞	27	22 15/16	19 7/16	24½	15⅝
Compound.	6½-11 x 5½	60	97 13/16	51½	71⅞	24	17⅛	69 11/16	23	36¾	22 15/16	36	6	14	14	22¾	22 15/16	18 1/16	24½	15⅝
	7 -13 x 5½	60	100	51½	77 3/16	28	21 15/16	69 13/16	25⅛	38⅞	22 15/16	36	6	15⅝	11⅞	27	22 15/16	19 7/16	24½	15⅝
	6½-11 x 5½	30	88¾	38	71⅞	24	17⅛	60⅝	23	32⅝	18⅝	36	6	14	14	18⅝	14	18 1/16	—	15⅜
	7 -13 x 5½	40	97⅞	41	77 3/16	28	21 15/16	66 1/16	25⅛	35⅛	20¾	36	6	15⅝	11⅞	23¼	15	19 7/16	—	16

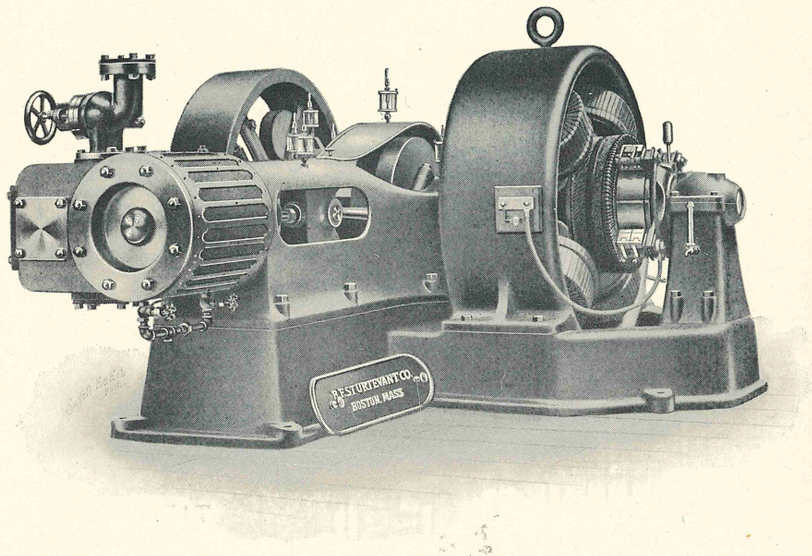

THE STURTEVANT GENERATING SET

WITH AUTOMATIC CENTRE-CRANK HORIZONTAL ENGINE AND FOUR-POLE GENERATOR.

THE STURTEVANT

GENERATING SETS

WITH CENTRE-CRANK HORIZONTAL ENGINES AND FOUR-POLE GENERATORS.

THE Centre-Crank type of Horizontal Engine lends itself most admirably to direct connection to generators of the circular type, as is evidenced by the illustrations upon the opposite and succeeding pages. Upon one side of the engine the shaft is connected to the armature shaft which is supported in an outside bearing, while to the other end is fitted the centrifugal governor. All armature shafts are attached to engine shafts by flanged couplings, one-half forged solid with the armature shaft and through bolted in all except the smaller sizes, which are connected by tap bolts. A substantial base forms a harmonious part of the engine bed and renders the entire foundation extremely rigid. Sets of this type can be made either right or left hand.

These engines, having been primarily designed for dynamo driving, are of necessity of the highest grade. The frame with the attached oil guard and removable side plates practically encloses the running parts of the engine, preventing the throwing of oil and largely decreasing the annoyance from dust and grit. Continuous sight-feed oiling arrangements are provided throughout for all bearings.

Size of Engine.	Steam Pressure Required in Pounds.	Revolutions per Minute.	Pipes.		Size Number of Generator, Type M.P.4.	K.W.	Number of 16 c. p. 55 watt Lamps.	Weight of Engine and Generator complete in Pounds.
			Steam.	Exhaust.				
6 x 8	120	400	2	2½	30	15	275	6,000
8 x 8	80	400	2½	3	30	15	275	6,500
8 x 10	120	325	2½	3	60	30	550	10,250
11 x 10	80	325	3½	4	60	30	550	10,750
10 x 12	120	300	3	3½	80	50	910	15,250
13 x 12	80	300	4	4½	80	50	910	16,000

WITH the smaller sizes of engines listed above, both four and eight-pole generators are used: the former type is illustrated upon the opposite page and the latter upon the succeeding page. In both types the outer bearing is of the ring-oiling, self-aligning variety with oil chamber in the pedestal beneath. The amount of oil in the chamber is clearly shown by the gauge glass.

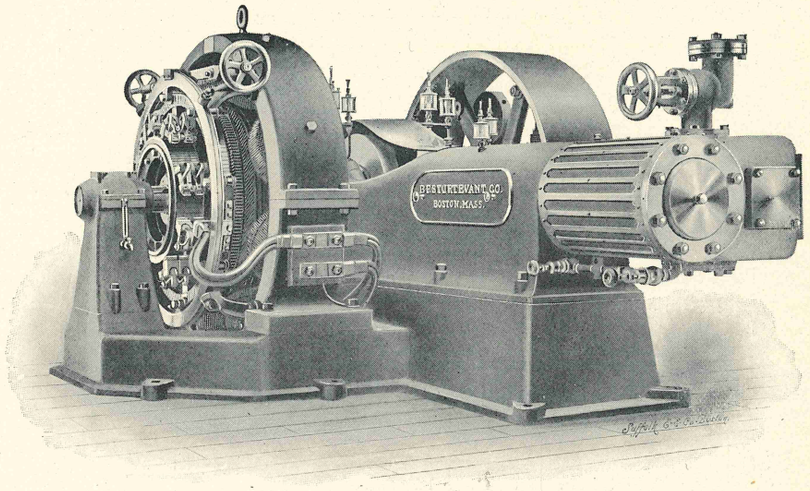

THE STURTEVANT GENERATING SET

WITH AUTOMATIC CENTRE-CRANK HORIZONTAL ENGINE AND EIGHT-POLE GENERATOR.

THE STURTEVANT

GENERATING SETS

WITH CENTRE-CRANK HORIZONTAL ENGINES AND EIGHT-POLE GENERATORS.

IN the Horizontal Engines the valve, which is of the balanced-piston type, is provided with snap-rings and operates in a removable bushing. The regulator, which is of the most delicate construction, secures the closest possible regulation through a range from zero to three-quarters cut-off.

Size of Engine.	Steam Pressure Required in Pounds.	Revolutions per Minute.	Pipes.		Size Number of Generator, Type M.P.8.	K.W.	Number of 16 c. p. 55 watt Lamps.	Weight of Engine and Generator complete in Pounds.
			Steam.	Exhaust.				
6 x 8	120	400	2	2½	4-100	15	275	3,800
8 x 8	80	400	2½	3	4-100	15	275	3,900
8 x 8	80	375	2½	3	6-100	20	365	5,000
15 x 8	40	250	3	3½	10-100	20	365	6,000
15 x 10	35	250	3	3½	10-100	20	365	8,600
8 x 10	120	350	2½	3	10-100	30	550	8,000
11 x 10	80	350	3½	4	10-100	30	550	8,300
10 x 10	125	325	3	3½	15-100	40	730	9,200
11 x 10	80	300	3½	4	15-100	40	730	9,400
10 x 12	120	275	3	3½	24-100	50	910	14,250
13 x 12	80	275	4	4½	24-100	50	910	15,000
12 x 12	120	275	4	4½	24-100	60	1,100	14,750
14 x 12	80	275	5	6	24-100	60	1,100	15,200
12 x 14	120	275	4	5	34-100	75	1,365	19,300
14 x 14	80	275	5	6	34-100	75	1,365	19,800
16 x 14	80	250	5	6	50-100	100	1,820	24,000

THE 8-pole generators employed in connection with these engines are identical in general construction with the independent machines previously described. In the larger sizes the magnet frame is made in two pieces. The two-circuit method of winding avoids the necessity of absolute concentricity of field and armature to insure sparkless operation.

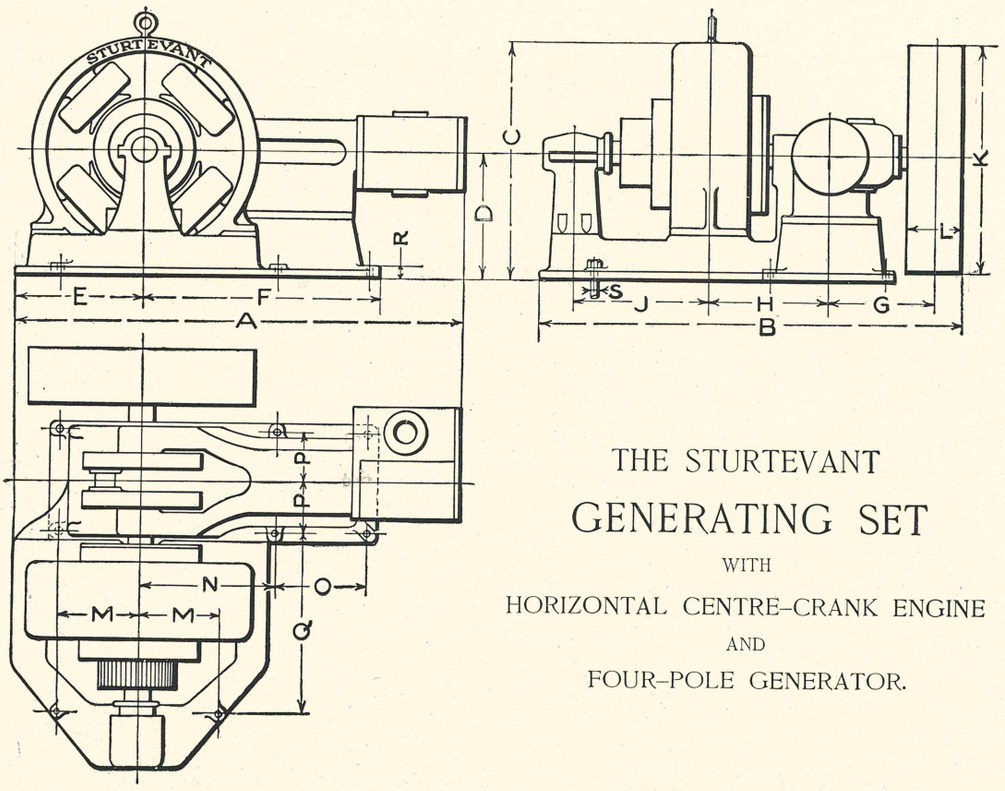

THE STURTEVANT

GENERATING SET

WITH

HORIZONTAL CENTRE-CRANK ENGINE

AND

FOUR-POLE GENERATOR.

THE STURTEVANT GENERATING SETS

WITH HORIZONTAL CENTRE-CRANK ENGINES AND FOUR-POLE GENERATORS.

TABLE OF PRINCIPAL DIMENSIONS.

ALL DIMENSIONS ARE IN INCHES.

Size of Engine.	Size of Generator.	A	B	C	D	E	F	G	H	J	K	L	M	N	O	P	Q	R	S
6 x 8	30	75	66 3/16	39 1/4	21 3/4	19 1/4	45 1/2	17 11/16	21 5/8	18 5/8	32	6 1/2	12	16 1/8	28 1/8	10 5/16	28 5/16	1 7/8	7/8
8 x 8	30	75 1/4	68 3/16	39 1/4	21 3/4	19 1/4	45 1/2	18 11/16	21 5/8	18 5/8	36	8 1/2	12	16 1/8	28 1/8	10 5/16	28 5/16	1 7/8	7/8
8 x 10	60	96 5/8	85 7/8	48 1/2	26 1/4	23 5/8	57 3/8	21 1/4	28 11/16	22 15/16	42	10 1/2	15 3/8	20 1/8	35 1/2	11 3/8	38	2 1/4	1
11 x 10	60	95 7/8	87 7/8	48 1/2	26 1/4	23 5/8	57 3/8	22 1/4	28 11/16	22 15/16	48	12 1/2	15 3/8	20 1/8	35 1/2	11 3/8	38	2 1/4	1
10 x 12	80	109 1/4	101 1/4	57 1/2	32	27 5/8	64 1/2	26	31 5/8	29 5/8	54	12 1/2	19 1/4	22 5/8	41 7/8	14 11/16	42	2 1/4	1 1/4
13 x 12	80	110 1/4	102 1/4	57 1/2	32	27 5/8	64 1/2	26 1/2	31 5/8	29 5/8	60	13 1/2	19 1/4	22 5/8	41 7/8	14 11/16	42	2 1/4	1 1/4

Explanation. — Dimension S gives diameter of all anchor bolts on each generating set.

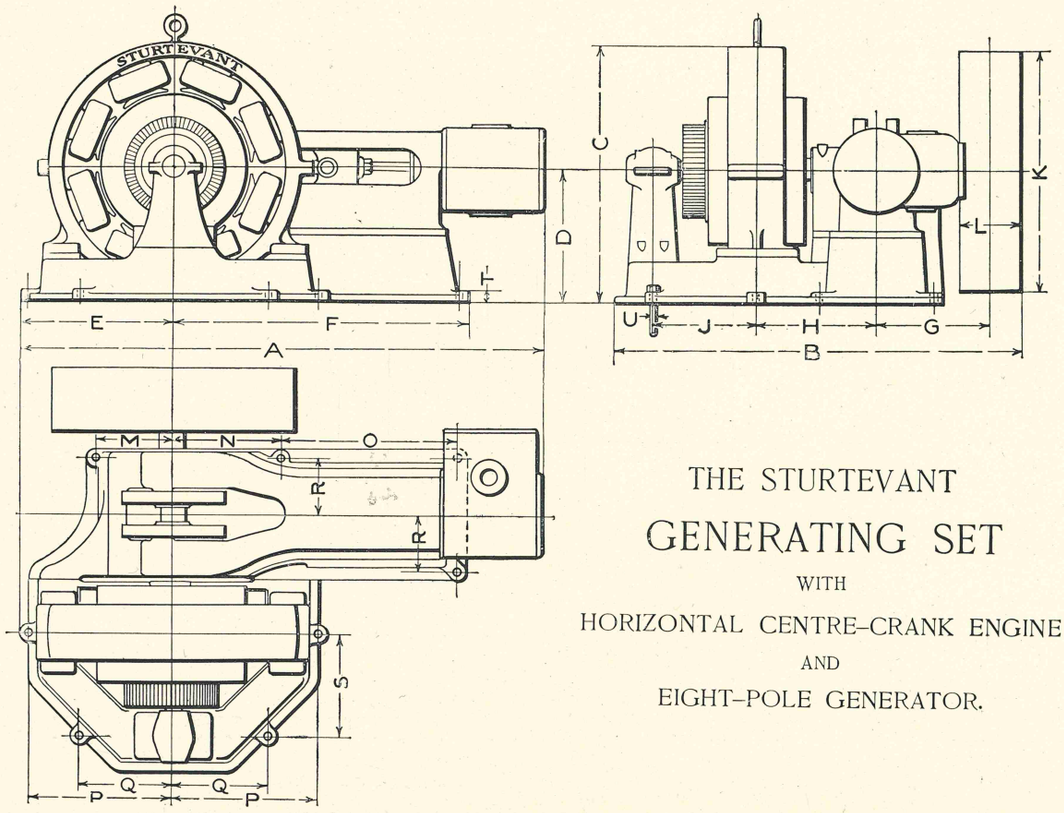

THE STURTEVANT GENERATING SET

WITH

HORIZONTAL CENTRE-CRANK ENGINE

AND

EIGHT-POLE GENERATOR.

THE STURTEVANT GENERATING SETS

WITH HORIZONTAL CENTRE-CRANK ENGINES AND EIGHT-POLE GENERATORS.

TABLE OF PRINCIPAL DIMENSIONS.

ALL DIMENSIONS ARE IN INCHES.

Size of Engine.	Size of Generator.	A	B	C	D	E	F	G	H	J	K	L	M	N	O	P	Q	R	S	T	U
6 x 8	4-100	75 11/16	55 1/2	38 1/2	21 3/4	19 15/16	45 1/2	17 11/16	18	13	32	6 1/2	12	16 1/8	28 1/8	18 11/16	12 1/4	10 5/16	13	1 7/8	7/8
8 x 8	4-100	75 15/16	57 1/2	38 1/2	21 3/4	19 15/16	45 1/2	18 11/16	18	13	36	8 1/2	12	16 1/8	28 1/8	18 11/16	12 1/4	10 5/16	13	1 7/8	7/8
8 x 8	6-100	77 5/16	62 7/16	40 1/2	21 3/4	21 5/16	45 5/16	18 11/16	19 7/8	14 5/8	36	8 1/2	12	16 1/8	28 1/8	20	13	10 5/16	14 5/8	1 7/8	7/8
15 x 8	10-100	83 3/8	68 5/16	42 3/4	21 3/4	24 1/8	45 5/8	18 11/16	21 3/4	18	36	8 1/2	12	16 1/8	28 1/8	22 3/4	14 3/4	10 5/16	18	1 7/8	1
8 x 10	10-100	98 9/16	75 1/4	47 1/4	26 1/4	25 5/16	57 3/8	21 1/4	24	18	42	10 1/2	15 3/8	20 1/8	35 1/2	23 13/16	15 1/2	11 3/8	18	2 1/4	1
15 x 10	10-100	98 9/16	77 1/4	47 1/4	26 1/4	25 5/16	57 3/8	22 1/4	24	18	48	12 1/2	15 3/8	20 1/8	35 1/2	23 13/16	15 1/2	11 3/8	18	2 1/4	1
11 x 10	10-100	97 13/16	77 1/4	47 1/4	26 1/4	25 5/16	57 3/8	22 1/4	24	18	48	12 1/2	15 3/8	20 1/8	35 1/2	23 13/16	15 1/2	11 3/8	18	2 1/4	1
10 x 10	15-100	102 9/16	79 3/8	51 1/8	26 1/4	30 1/4	57 3/8	22 1/4	23 1/2	20 1/4	48	12 1/2	15 3/8	20 1/8	35 1/2	28 1/2	18 1/4	11 3/8	20 1/4	2 1/4	1
11 x 10	15-100	102 1/2	79 3/8	51 1/8	26 1/4	30 1/4	57 3/8	22 1/4	23 1/2	20 1/4	48	12 1/2	15 3/8	20 1/8	35 1/2	28 1/2	18 1/4	11 3/8	20 1/4	2 1/4	1
10 x 12	24-100	117 1/8	97 1/16	60	32	35 1/2	64 1/2	26	29 15/16	25 1/4	54	12 1/2	19 1/4	22 5/8	41 7/8	33 3/4	21	14 11/16	25 1/4	2 1/4	1 1/4
13 x 12	24-100	118 1/8	98 3/16	60	32	35 1/2	64 1/2	26 1/2	29 15/16	25 1/4	60	13 1/2	19 1/4	22 5/8	41 7/8	33 3/4	21	14 11/16	25 1/4	2 1/4	1 1/4
12 x 12	24-100	118	98 3/16	60	32	35 1/2	64 1/2	26 1/2	29 15/16	25 1/4	60	13 1/2	19 1/4	22 5/8	41 7/8	33 3/4	21	14 11/16	25 1/4	2 1/4	1 1/4
14 x 12	24-100	121 3/16	98 3/16	60	32	35 1/2	64 1/2	26 1/2	29 15/16	25 1/4	60	13 1/2	19 1/4	22 5/8	41 7/8	33 3/4	21	14 11/16	25 1/4	2 1/4	1 1/4
12 x 14	34-100	134 3/8	108 7/8	66 1/2	36	39 1/4	76 3/4	29 5/8	33 3/4	28 3/4	66	14 1/2	22	26 1/2	48 1/2	37 1/2	25	17 1/4	28 3/4	2 1/4	1 1/2
14 x 14	34-100	135 1/8	108 7/8	66 1/2	36	39 1/4	76 3/4	29 5/8	33 3/4	28 3/4	66	14 1/2	22	26 1/2	48 1/2	37 1/2	25	17 1/4	28 3/4	2 1/4	1 1/2
16 x 14	50-100	140 5/8	114 3/8	70	36	42 1/4	76 1/4	29 5/8	35 1/2	32 1/2	66	14 1/2	22	26 1/2	48 1/2	40 1/2	24 3/4	17 1/4	32 1/2	2 1/4	1 1/2

Explanation. — Dimension U gives diameter of all anchor bolts on each engine.